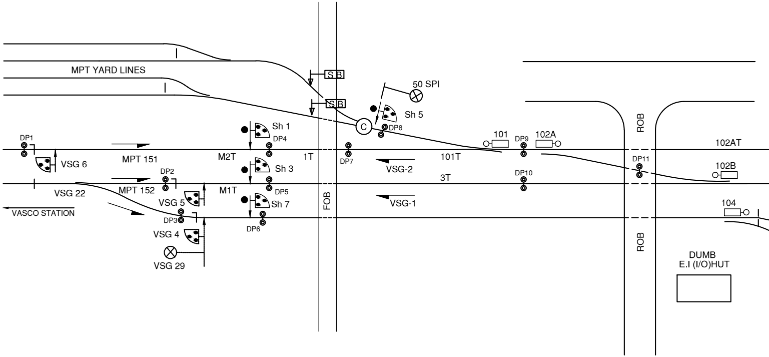
MPT YARD LINES
S B
S B
50 SPI
Sh 5
DP8
Sh 1
DP4
Sh 3
DP5
Sh 7
DP6
C
101
DP9
102A
102AT
DP1
VSG 6
MPT 151
M2T
1T
DP7
101T
VSG-2
DP11
102B
DP2
DP10
3T
VSG 22
MPT 152
M1T
VSG 5
FOB
VSG-1
104
VASCO STATION
DP3
VSG 4
VSG 29
ROB
ROB
DUMB
E.I (I/O)HUT

AN ISO 9001 : 2008
ISPS COMPLIANT PORT

CONSULTANTS

aarvee associates
architects engineers & consultants pvt.ltd.
Ravula Residency, Srinagar Colony Main Rd., Hyderabad-82, India
Tel: +91-40-23737633; Fax: +91-40-23736277
e-mail: railways@aarvee.net; web:www.aarvee.net

MOR

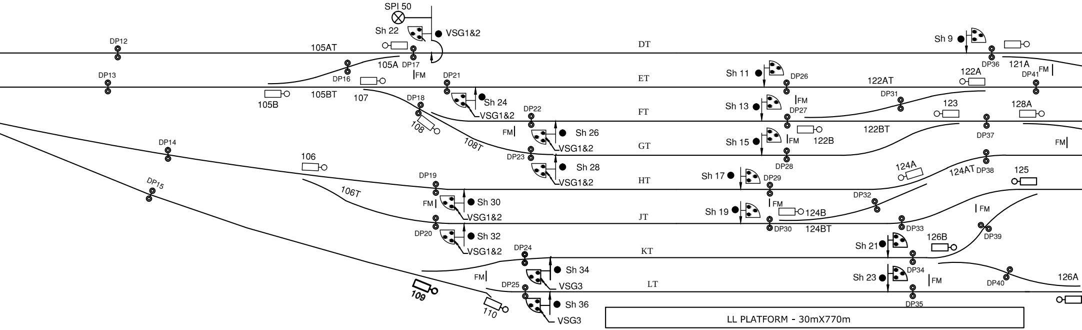
SPI 50
Sh 22
VSG1&2
DP12
105AT
DT
Sh 9
DP36
121A
FM
105A
DP17
FM
DP16
DP13
DP21
ET
Sh 11
DP26
122AT
122A
DP41
105B
105BT
107
DP18
Sh 24
VSG1&2
DP22
FT
Sh 13
FM
DP27
DP31
123
128A
108
108T
FM
Sh 26
VSG1&2
Sh 15
FM
122B
122BT
DP37
FM
DP14
DP23
GT
DP28
106
Sh 28
VSG1&2
124A
124AT
DP38
125
DP19
HT
Sh 17
DP29
DP15
106T
FM
Sh 30
VSG1&2
Sh 19
FM
124B
DP32
FM
JT
DP30
124BT
DP33
DP39
DP20
Sh 32
VSG1&2
126B
DP24
KT
Sh 21
FM
Sh 34
VSG3
Sh 23
DP34
FM
DP40
126A
109
DP25
LT
110
Sh 36
VSG3
DP35
LL PLATFORM - 30mX770m

MUGAO PORT TRUST

(SUIT TO 25KV AC)

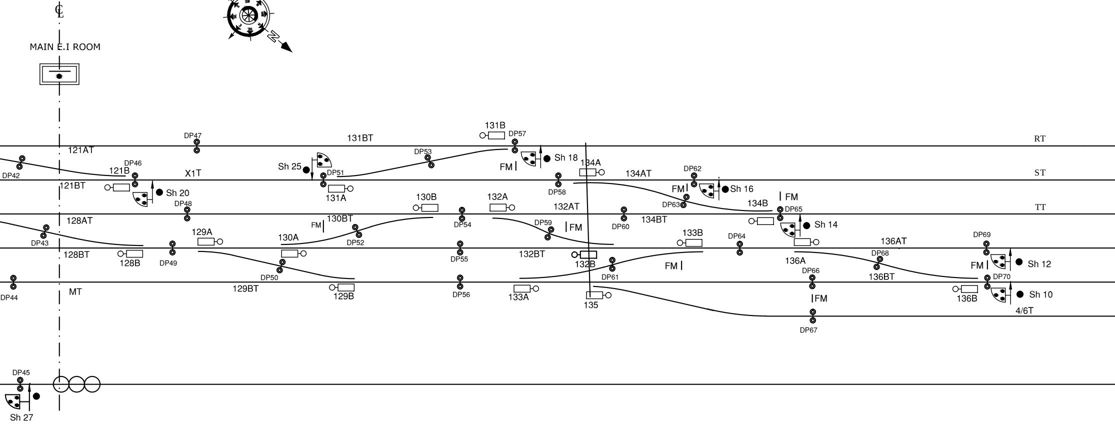

℄
MAIN E.I ROOM
N
RT
ST
TT
121AT
121BT
121B
X1T
128AT
128BT
128B
MT
129A
129BT
129B
130A
130BT
130B
131A
131B
131BT
132A
132AT
132B
132BT
133A
133B
134A
134AT
134B
134BT
135
136A
136AT
136B
136BT
4/6T
DP42
DP43
DP44
DP45
DP46
DP47
DP48
DP49
DP50
DP51
DP52
DP53
DP54
DP55
DP56
DP57
DP58
DP59
DP60
DP61
DP62
DP63
DP64
DP65
DP66
DP67
DP68
DP69
DP70
Sh 10
Sh 12
Sh 14
Sh 16
Sh 18
Sh 20
Sh 25
Sh 27
FM
FM
FM
FM
FM
FM
FM
FM
FM
FM

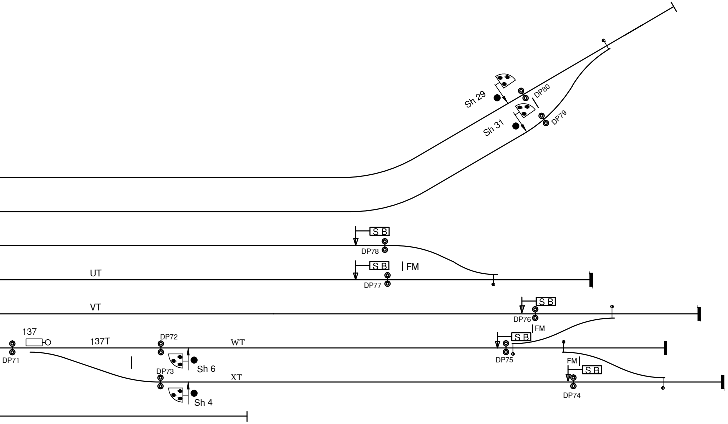
Sh 29
DP80
Sh 31
DP79
S B
DP78
S B
FM
UT
DP77
VT
S B
DP76
FM
S B
137
137T
DP72
WT
DP75
DP71
FM
S B
DP73
Sh 6
XT
DP74
Sh 4

REF.P.WAY PLAN NO. - - -

ALT.NO	WORK
	PROPOSED SIGNALLING ARRA YARD. REF: - - -

ALT-1	______

	APPROVAL OF CSTE/SWR	APPROVAL OF C.O.M/SWR	C.R.S SANCTION NO.	DATE OF COMPLETION
NGEMENT AT MORMUGAO PORT			—	

REVISION	द. प. रेलवे हुबलि मंडल	SOUTH WESTERN RAILWAY HUBLI DIVISION
DRAWN	संकेत एवं दूरसंचार	SIGNAL & TELECOMMUNICATION
CHECKED: JE/Drg SSE/Drg AXSTE	मुरगांव पत्तन न्यास यार्ड (रेलवे) संकेत आरेख स्टैंडर्ड II(R)	MORMUGAO PORT TRUST YARD (RAILWAY) SIGNALLING PLAN STANDARD :II(R)
XSTE		SCALE=NOT TO SCALE
DY.CSTE	DRG.No.--	

SUPERSEDES SIGG.PLAN NO.