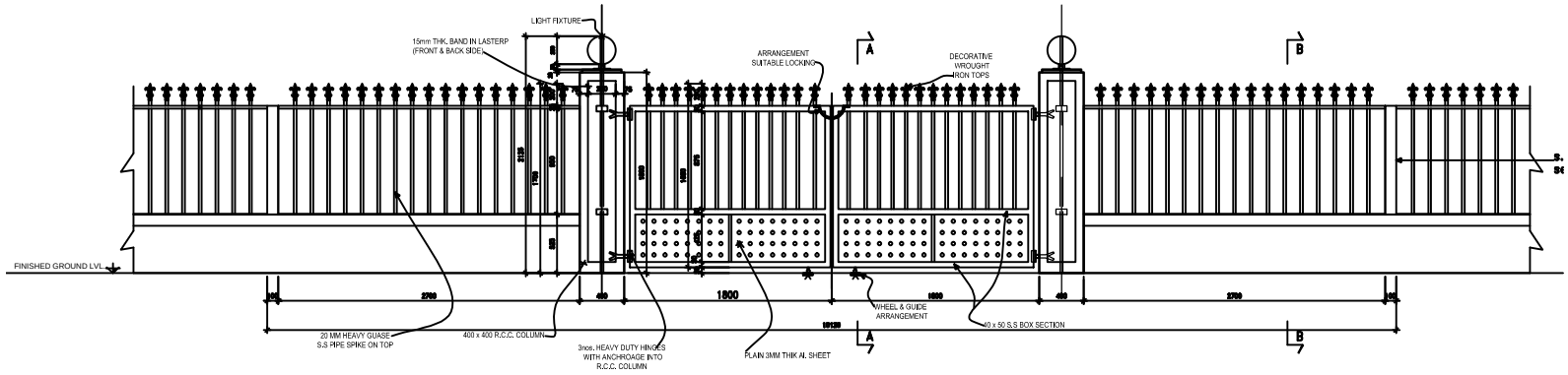

FRONT ELEVATION

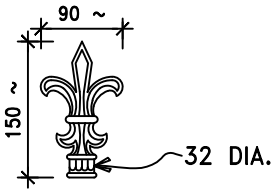

DETAIL - Y
DECORATIVE WROUGHT IRON TOPS

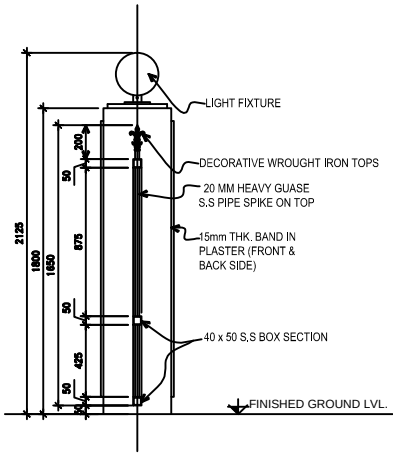

SECTION A-A

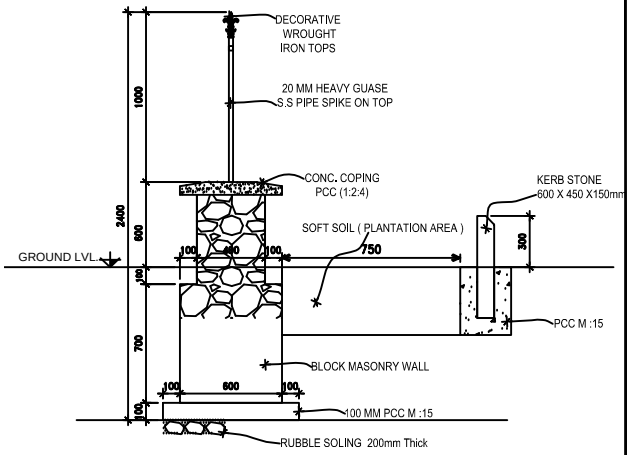

SECTION B-B

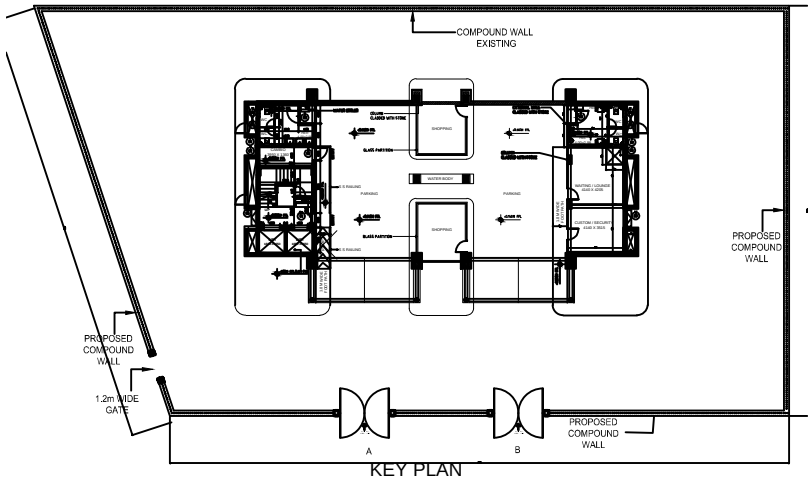

KEY PLAN

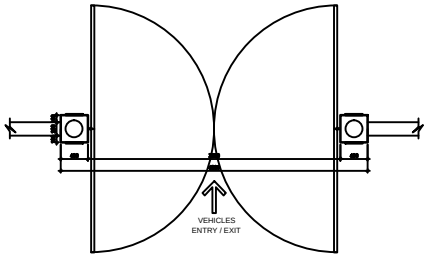

PLAN

ALIGNMENT OF COMPOUND WALL TO BE FINALISED AT SIGHT
LOCATION OF GATE B TO BE FINALISED AT SIGHT

Rev.	Date	Drawn	Code Checked	Sign.	Description	Code Approved	Sign.
4							
3	18-08-16		AKC		REVISION IN LEVELS & ADDITIONS	AKC	
2	01-03-16		AKC		REVISED AS PER CLIENTS COMMENTS.	AKC	
1	14-08-15		AKC		REVISED AS PER CLIENTS COMMENTS.	AKC	
0	31-07-15		AKC		NEW DRAWING AS PER CLIENT REQ.	AKC	

File name: WTE-2185-SE-01-376-SE-COMPOUND_WALL_GATE_DETAIL.dwg

Wadia Techno Engg . Services Ltd. Mumbai

Client: MORMUGAO PORT TRUST

Project: CRUISE TERMINAL BUILDING AT MORMUGAO HARBOUR, GOA

Title: COMPOUND WALL & GATE DETAIL OP – 1

Scale	Job no.	Stage	Bldg.no.	Drg.no.	Rev.	Sheet	Of
A2 1:100	WTE-2185	03	01	376	R3	1	2